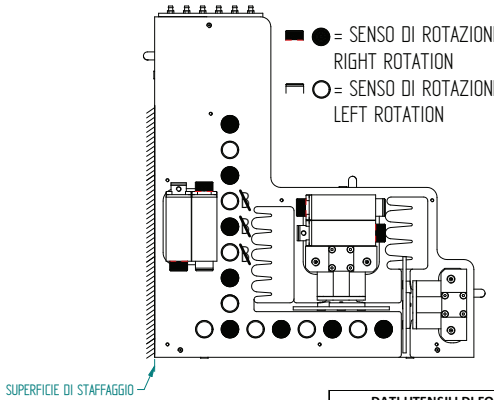

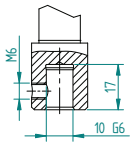

CONNESSIONE UTENSILE
TOOL CONNECTION

DATI UTENSILI DI FORATURA
TOOLS DATASHEET

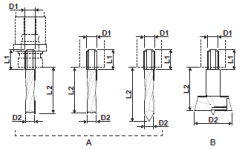

Mandrini	D1 max	D2 max	L1 max	L2 max
Verticali	10	20*	20	57
Orizzontali	10	20	20	57

*= Gli utensili di tipo B possono avere un diametro massimo di 35 mm
Type "B" tools can have Ø35 max diameter

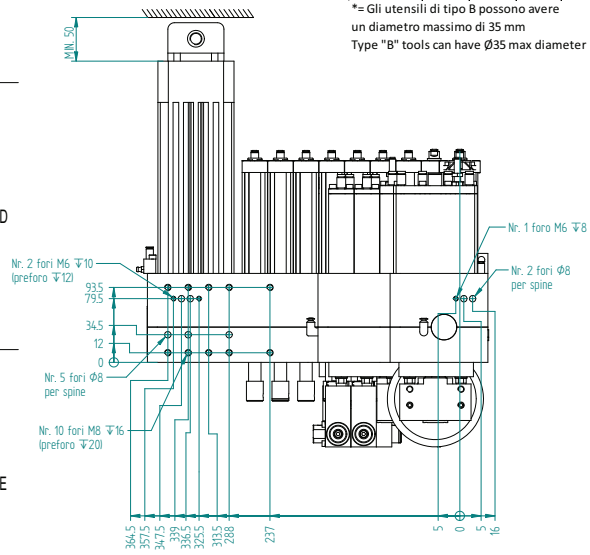

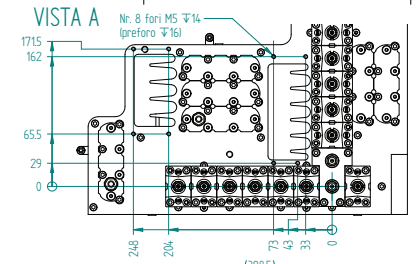

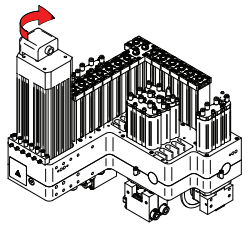

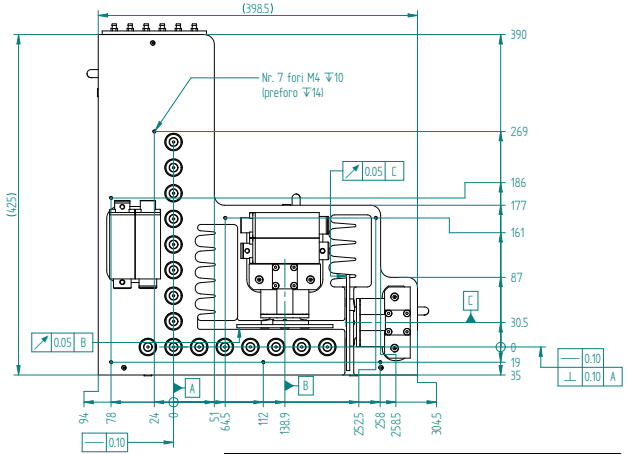

SPECIFICATIONS FOR THE COMPRESSED AIR OF THE PNEUMATIC SUPPLY
Introduce compressed air with purity according to ISO 8573-1, Class 3, 4, 2, i.e.:
Class 3 for the solid particles (size of the solid particles < 1 µm)
Class 4 for humidity (dew point < 3 °C (37.5 °F))
Class 2 for total oil (oil concentration < 0.1 mg/m3)

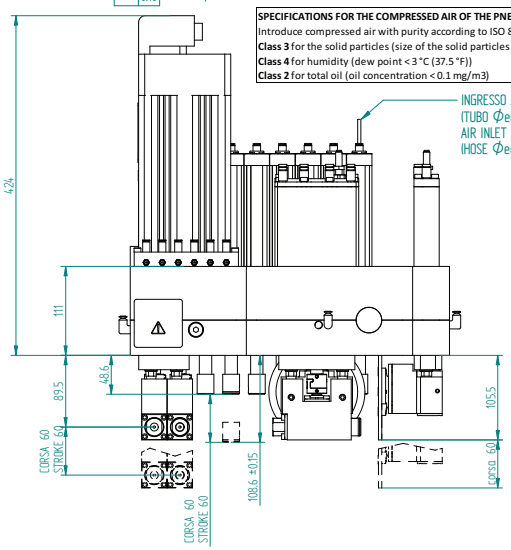

Nr. 12 fori M8 ↧16
NB: per il fissaggio della testa utilizzare esclusivamente i fori evidenziati e viti con classe di resistenza 12.9
NB: use the indicated holes for fixing the head with 12.9 resistance class screws

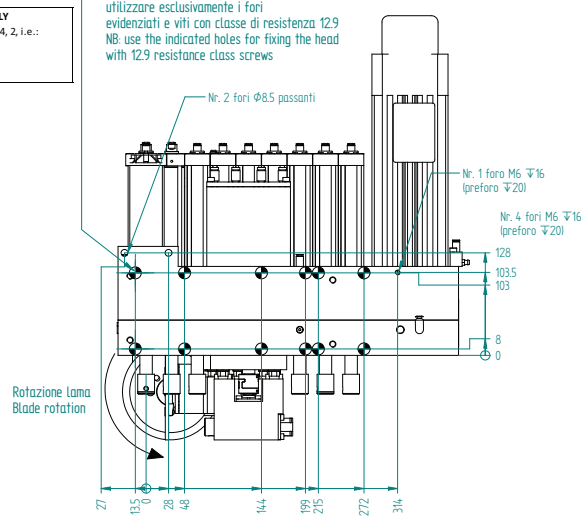

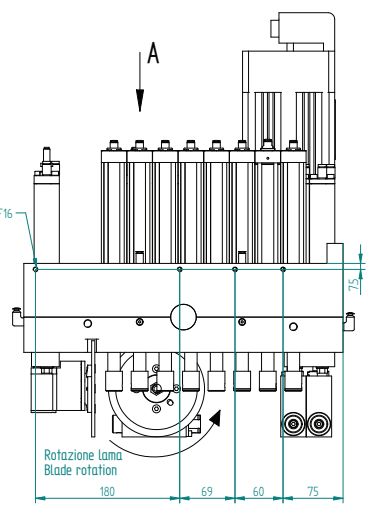

Boring head technical features / Caratteristiche tecniche testa			
Working parameters	**Parametri di lavoro**		[unità misura] *[unit]*
Max working frequency	Frequenza di lavoro massima	100	Hz
Speed ratio (V spindles / motor)	Rapporto di trasmissione (mandrino V / motore)	1 / 1	OUT / IN
Motor rotation	Senso di rotazione del motore	destro / *right*	
Max vertical spindles speed (100 Hz)	Regime massimo di rot. mand. verticali (100 Hz)	6000	rpm
Max horizontal spindles speed (100 Hz)	Regime massimo di rotazione orizzontali (100 Hz)	4740	rpm
Max working temperature	Temperatura massima di funzionamento	85	°C
Max Noise	Rumorosità massima	85	dB
Acceleration ramp (0-6000 rpm)	Rampa di accelerazione (0-6000 rpm)	> 1	s
Max blade spindles speed (100 Hz)	Regime massimo di rotazione lama (100 Hz)	6000	rpm
Oval cylinder thrust	Spinta camicie ovali	460 (6 bar)	N
Round cylinder thrust	Spinta camicie tonde	305 (6 bar)	N
Vertical spindles stroke	Corsa mandrini verticali	60	mm
Horizontal spindles stroke	Corsa mandrini orizzontali	60	mm
Weight	Peso	~ 75	kg
Tools coupling	Connessione utensili	Ø10	mm
Max blade diameter	Diametro massimo lama	Ø120	mm
Lubrication type	Tipo lubrificazione	MANUALE	-
Transmission lubrication	Lubrificazione trasmissione	Alphaspeed GYS 4 - 128 HD	-
Supply air pressure	Pressione di alimentazione aria	6 (7 max)	bar
Liquid cooling	Raffreddamento a liquido	-	
Chiller flow	Portata del refrigeratore	-	l/min
Chilling dissipated power	Potenza dissipata nel raffreddamento	-	W
Refrigeration fluid temperature	Temperatura fluido refrigerante	-	°C
Working environment temperature	Temperatura ambiente di lavoro	0÷40	°C
Motor rated data	**Dati nominali motore**		
Rated power	Potenza nominale	1.7	kW
Rated voltage	Tensione nominale	230/400	V
Rated frequency	Frequenza nominale	50	Hz
Rated current	Corrente nominale	7.4/4.3	A
Rated speed	Velocità di rotazione nominale	2790	rpm
cos φ	cos φ	0.72	-

CONNESSIONE ELETTRICA SENSORE GR. LAMA
BLADE SENSOR ELECTRIC CONNECTION

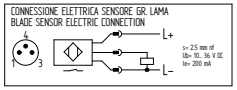

WARM-UP CYCLE
Provide, for each daily startup of the machine, the following warm-up cycle for boring heads:
STEP 1
Head at **4000** rpm (rotation of vertical spindles) for 2 minutes. During this phase, all vertical and horizontal spindles must be ejected one at a time and remain in the working position for about 1 second. Pneumatic handling of the spindles must be performed in a cyclic manner throughout the duration of this step.
STEP 2
Head at **5000** rpm (rotation of vertical spindles) for 2 minutes. During this phase, all vertical and horizontal spindles must be ejected one at a time and remain in the working position for about 1 second. Pneumatic handling of the spindles must be performed in a cyclic manner throughout the duration of this step.
STEP 3
Head at **6000** rpm (rotation of vertical spindles) for 1 minute. During this phase, vertical and horizontal spindles must be ejected together and remain in the working position for about 3 seconds. Pneumatic handling of the spindles must be performed in a cyclic manner throughout the duration of this step. At the end of warm-up cycle the temperature of the head, detected on case and cover, must be greater than 25 ° C. Otherwise repeat step 3 until exceeding the displayed temperature.

GREASING TIME

Frequency	every 40h of operation
Qty of grease for each grease nipple	5 grams
Number of grease nipples	6

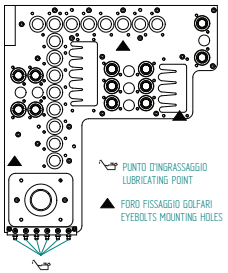

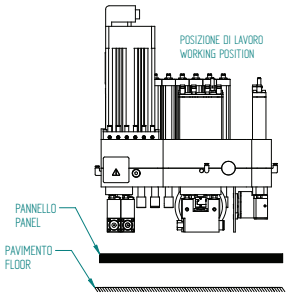

REV.	DESCRIZIONE REVISIONE / *REVISION DESCRIPTION*			DATA / *DATE*	FIRMA *SIGN*
	DISEGNATO / *DRAW BY*	CONTROLLATO / *CHECKED BY*	APPROVATO / *APROVED*		
DATA *DATE*	11/01/2013	11/01/2013			
FIRMA *SIGN*	Fratesi M.	Ronconi M.			

SCALA / *SCALE* :
PESO / *WEIGHT* :
GREZZO DI / *RAW* :
SOSTITUISCE / *REPLACE* :
MATERIALE / *MATERIAL* :
TRATTAMENTO / *TERMICO* / *HEAT TREATMENT* :
RIVESTIMENTO / *SURFACE TREATMENT* :
CICLO DI VERNICIATURA / *PAINTING CYCLE* :
DENOMINAZIONE / *DESCRIPTION* : GR. TESTA BH26L Φ10 NEW H111 LUBRIF. MAN. CENTRALIZZATA DOPPIO VOLTAGGIO

QUOTE SENZA INDICAZIONE DI TOLLERANZA
DIMENSIONS WITHOUT TOLERANCE INFORMATION
- LAVORAZIONI MECCANICHE:
- *MECHANICAL WORKINGS* :
- SALDOCARPENTERIE:
- *WELDMENT* :
- GETTI
- *CASTING* :

HSD DIVISION
A1
NUMERO REVISIONE
REVISION
CODICE PEZZO / *PART N°*
H6318H0138

RIPRODUZIONE ED DIFFUSIONE VIETATA
REPRODUCTION AND DISCLOSURE OF THE DRAWING IS FORBIDDEN